Industrial LED lighting solutions

CROUSE-HINDS SERIES

Safe. Reliable. Efficient.

LED lighting solutions for industrial applications

EATON

Powering Business Worldwide

Industrial lighting solutions

Power generation. Food processing. Waste water treatment. Pulp and paper mills. Shipyards and ports. These are around-the-clock operations where employee safety and zero downtime are critical requirements. You need to maximize your efficiency and minimize the risk of damage to equipment or personnel. You need a partner like Eaton.

Eaton offers a large portfolio of innovative and reliable LED products for non-hazardous, industrial applications. We utilize more than 100 years of lighting expertise to optimize the benefits of LED technology to offer the safest and most reliable LED luminaires on the market today. **These luminaires are engineered to thrive where vibration, corrosion, moisture, dust and extreme temperatures exist.**

With its Crouse-Hinds Series LED luminaires, Eaton can deliver a lighting solution that performs reliably in the worst operating conditions, all the while reducing your energy and maintenance costs.

Focused on reliability

Products engineered for long life and high lumen performance in harsh and heavy industrial areas

High Bay LED Lighting
Up to 117 lumens per watt and 67% energy savings over traditional HID fixtures.

The perfect replacement for 250W to 1500W HID and 2-10 lamp fluorescent fixtures.

LED Floodlighting
Up to 6 times longer life and 65% reduction in power consumption compared to equivalent HID floodlights

8 models available ranging from 3,000 to 50,000 lumens.

High/Mid Bay LED Lighting
A durable, shock-resistant light source that provides up to 6 times greater life and 53% energy savings over HID.

Available with custom Type I, III and V optics to direct light where customers need it most.

LED Wallpacks
Uniquely engineered to provide a low profile wall pack solution for industrial lighting applications.

Available from 3,000 to 7,000 lumens and designed for extreme conditions.

Linear LED Lighting
Engineered to handle demanding conditions.

Stands up to high vibration, hose down, shock and impact, while delivering high lumen output for up to 20 years

Low Bay/Targeted LED Lighting
85% more energy-efficient than a 200W incandescent and over 200 times the rated life.

Ideal for lower mounting heights, confined spaces, processing areas or utility rooms.

Industrial High Bay LED Luminaires

IHB series LED luminaires are the perfect replacement for 250W-1,500W+ HID and 2-10 lamp T8, T12 and T5HO fluorescent high bay fixtures. Designed for light industrial locations that:

- require continuous and consistent light levels
- require frequent on-and-off of lights
- are difficult to re-lamp

IHB16L

IHB32L

Key design features and benefits:

- 5 models ranging from 16,000 to 67,000 lumens replace 250W-1,500W+ HID and 2-10 lamp T8, T12 and T5HO fluorescent
- High efficacy: up to 117 lumens per watt
- 80 CRI
- Up to 67% energy savings over traditional HID fixtures
- Aluminum heat sinks designed to provide long life
- Multiple lens options available: tempered clear glass; diffused glass or diffused polycarbonate
- Versatile mounting options
- Optional 0-10V dimming capabilities
- Damp location rated
- Operating ambient: -40°C to +60°C

	Equivalent luminaires			@ 120V				
Model	**HID**	**Fluorescent**	**Voltage**	**PF**	**THD**	**Wattage**	**Lumens†**	**Efficacy**
IHB16L	250-500W	4 lamp T5HO	120	0.99	8%	145	16,900	117
IHB24L	400-750W	4-6 lamp T5HO	120	0.99	7%	216	25,350	117
IHB32L	500-1,000W	6-8 lamp T5HO	120	0.99	8%	289	33,800	117
IHB48L	750-1,500W	8-10 lamp T5HO	120	0.99	8%	436	50,700	116
IHB64L	1,000-1,500W+	10 lamp T5HO	120	0.99	8%	582	67,600	116

†Preliminary typical values (+/- 10%); data subject to change. 8L option available; consult product line for availability.

Certifications:

- UL1598 Luminaires
- UL8750 LED
- cULus
- Damp location
- DesignLights Consortium® Qualified (some models are not DLC qualified)*

* Approved models include: IHB16L/UNV1; IHB16L/UNV34; IHB24L/UNV1; IHB24L/UNV34; IHB32L/UNV1; IHB32L/UNV34; IHB48L/UNV1; IHB48L/UNV34; IHB64L/UNV1; IHB64L/UNV34. Refer to www.designlights.org Qualified Products List under Family Models for full listing details. Not all models are approved for all application categories.

Industrial High Bay LED Luminaires - Ordering Information

Part number example

IHB16LP1R1/UNV1 S903

IHB series high bay LED, 16,900 lumens, 145 watts, cool white, ¾" pendant mount, aisle optics, 100-277 VAC/127-250 VDC driver, polycarbonate lens

IHB 16L P1 R1 /UNV1 S903

Series

IHB	IHB series light industrial high bay fixture

Lumens/watts*

8L**	8,450 lumens, 71 watts
16L	16,900 lumens, 145 watts
24L	25,350 lumens, 216 watts
32L	33,800 lumens, 289 watts
48L	50,700 lumens, 436 watts
64L	67,600 lumens, 582 watts

*Typical values (+/- 10%); data subject to change.

**8L option available; consult product line for availability.

Color temperature

BLANK	Cool white

Mounting

BLANK	No mount
P1	¾" pendant mount kit (8L-32L models)
P2	¾" pendant mount kit (48L-64L models)

Options

BLANK	Glass lens
S891	Diffused glass lens
S903	Polycarbonate lens
S903D	Diffused polycarbonate lens
SO10	10 ft. SO cable

Voltage @ 50/60 Hz

/UNV1	100-277 VAC; 127-250 VDC
/UNV34	347-480 VAC
/UNV1D	Dimmable; 100-277 VAC; 127-250 VDC
/UNV34D	Dimmable; 347-480 VAC

Optics

BLANK	Wide optic
R1	Aisle optic

Mounting kits (ordered separately)

IHBP1 KIT	¾" pendant mount kit (8L-32L models)
IHBP2 KIT	¾" pendant mount kit (48L-64L models)
IHBJ1 KIT	48" jack chain kit
IHBJ2 KIT	72" jack chain kit
IHBJ3 KIT	96" jack chain kit
IHBJ4 KIT	120" jack chain kit
IHBJ5 KIT	144" jack chain kit
IHBA1 KIT	40" aircraft cable kit
IHBA2 KIT	80" aircraft cable kit
IHBA3 KIT	120" aircraft cable kit
IHBA4 KIT	180" aircraft cable kit

Replacement drivers (ordered separately)

100-277 VAC; 127-250 VDC

IHB UNV1D 75W DRIVER KIT*	Dimmable, 75W replacement driver
IHB UNV1D 150W DRIVER KIT**	Dimmable, 150W replacement driver

*8L and 24L models; **16L, 24L, 32L, 48L and 64L models.
(24L model uses a single 75W and a single 150W driver)

347-480 VAC

IHB UNV34D 75W DRIVER KIT*	Dimmable, 75W replacement driver
IHB UNV34D 150W DRIVER KIT**	Dimmable, 150W replacement driver

*8L and 24L models; **16L, 24L, 32L, 48L and 64L models.
(24L model uses a single 75W and a single 150W driver)

Mounting options:

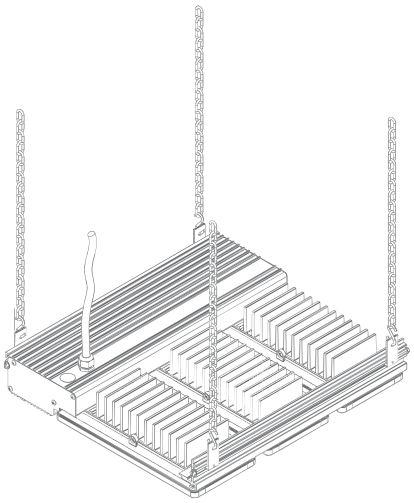

Jack chain

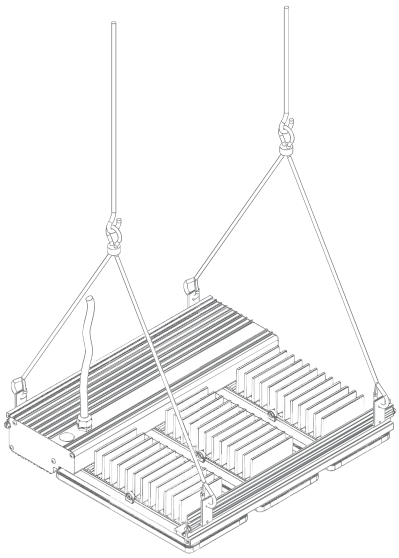

Aircraft cable

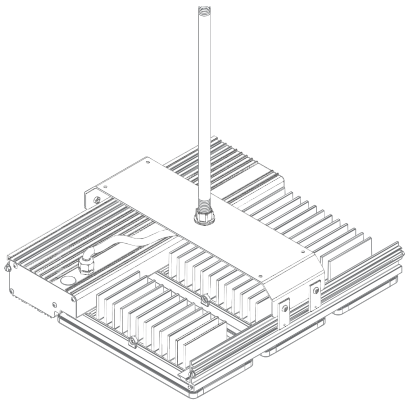

Pendant mount

Champ® Pro PFMA Series LED Floodlights

Champ Pro PFMA LED floodlights are designed to provide full-spectrum, crisp, white light. With eleven versions available from 3,000 to 50,000 lumens, the Champ Pro PFMA floodlight provides years of high quality lighting and maintenance-free performance.

- Ideal for indoor and outdoor wall or pole mounted area lighting in manufacturing plants, mine sites, processing areas, platforms, loading docks and parking areas

PFMA40L-PFMA50L

PFMA3L–PFMA25L

Key design features and benefits:

- Reduced footprint - Now 25% smaller footprint and 10-20 lbs. lighter than previous models.
- High efficiency LEDs and drivers provide up to 144 lumens per watt
- Up to 78% reduction in energy used versus equivalent HID fixtures
- Engineered for long life in extreme ambients. 3L-15L models rated for 60,000 hours in -40°C to 65°C ambients. 20L-50L models rated 60,000 hours in -40°C to 55°C ambients
- 7x6 and 3x3 floodlight pattern options provides maximum light distribution
- Full frame yoke utilizes the SFA6 slipfitter and SWB6 wall mount bracket (3L-25L models), making it ideal for retrofit or new installations
- Options include diffused glass or polycarbonate lens, bolt-on wire guard, bolt-on visor and slipfitter mounting adapters

Model	Nominal lumens	Wattage*	Lumens per watt	Equivalent HID luminaire
PFMA3L	3,312	26	129	70W
PFMA5L	5,381	40	133	100W
PFMA7L	7,274	55	132	175W
PFMA9L	9,479	67	142	250W
PFMA11L	11,776	82	144	320W
PFMA13L	13,362	93	143	400W
PFMA15L	15,183	108	140	500W
PFMA20L	20,500	175	117	600W-750W
PFMA25L	25,500	216	118	750W-1000W
PFMA40L	40,500	340	119	1500W+
PFMA50L	50,500	411	123	1500W+

* UNV1 at 120 VAC.

Certifications:

NEC and CEC:

- Wet Locations, Type 4X, IP66

UL Standards:

- UL8750 (PFM3L-PFM15L only); UL1598; UL1598A
- cUL Listed to CSA Standard CSA C22.2 No. 250

IEC Standards:

- IEC 60598
- CE

(nPFM20L-nPFM50L only):

- IEC 60598-1 amd IEC 60598-2-1
- Wet Locations, IP66
- CE marked

Champ® Pro PFMA LED Floodlights - Ordering information

Part number example

PFMA7LCY-UNV1-76-M20-S891-BZ

Champ PFMA floodlight, 7,274 lumens, cool white, yoke mount, 100-277 VAC driver, 20mm entry, diffused glass lens, bronze paint

PFMA 7L C Y - UNV1 - 76 - M20 - S891 - BZ

For 20L-50L IEC models, change to nPFMA

Light source/intensity

3L	3,312 nominal lumens*
5L	5,381 nominal lumens*
7L	7,274 nominal lumens*
9L	9,479 nominal lumens*
11L	11,776 nominal lumens*
13L	13,362 nominal lumens*
15L	15,183 nominal lumens*
20L	20,500 nominal lumens*
25L	25,500 nominal lumens*
40L	40,500 nominal lumens*
50L	50,500 nominal lumens*

*7x6 model

Color temperature

C	5000K, 70 CRI (cool white)
W	3000K, 70 CRI (warm white)

Mount

Y	Yoke

Voltage†

UNV1*	100 - 277 VAC, 50/60 Hz; 127 - 250 VDC
UNV34**	347-480 VAC, 50/60 Hz

† For 20L-50L models, change to /UNV1 and /UNV34

*IEC voltage; 100-240V @ 50/60 Hz

**Available for PFMA5L-50L only

Optical distribution

76	7x6 floodlight pattern optics
33	3x3 floodlight pattern optics

Entries

BLANK	¾" NPT
M20	20mm
M25	25mm

Lens material

BLANK	Clear glass lens
S891	Diffused glass lens
S903*	Polycarbonate lens

*3L-15L models only

Paint

BLANK	Gray
BZ	Bronze
WH	White

Accessories *(ordered separately)*

BLHN	Bull horn, 1 tenon, gray
BLHN-BZ	Bull horn, 1 tenon, bronze
BLHN-WH	Bull horn, 1 tenon, white
BLHN2	Bull horn, 2 tenon, gray
BLHN-BZ2	Bull horn, 2 tenon, bronze
BLHN-WH2	Bull horn, 2 tenon, white
BLHN3	Bull horn, 3 tenon, gray
BLHN-BZ3	Bull horn, 3 tenon, bronze
BLHN-WH3	Bull horn, 3 tenon, white
DSV2	Bolt-on visor
P62	Bolt-on wire guard
SC831	Safety cable
SFA6*	Slipfitter
SWB6*	Slipfitter wall mount

*3L-25L models only.

Champ® Pro PVML Series LED Luminaires

Champ® Pro PVML luminaires are designed to provide full-spectrum, crisp, white light with custom Type I, III and V distribution. Nine versions of the PVML series are available, providing ideal solutions for a wide range of heavy industrial, non-hazardous applications, including:

- areas with mounting heights from 8 feet up to 60 feet
- Type 4X, marine, wet locations and hose-down environments
- locations requiring continuous and consistent light levels in extreme ambient temperatures

PVML-3–PVML–11

PVM13L and PVM17L

PVM21L and PVM25L

Key design features and benefits:

- Rated life of 60,000 hours @ 55°C operating ambient and 24/7 continuous operation for 365 days. Economic life of 170,000 hours @ 25°C ambient
- Die cast aluminum heat sink increases surface areas and improves airflow, optimizing both LED and driver life
- Custom Type V, Type III and Type I optics distribute the light where it is needed most and can help reduce the number of fixtures required for certain lighting applications
- Cool white standard (5000K, 70 CRI); warm white (3000K, 80 CRI) and neutral white (4000K, 70 CRI) optional
- Energy-efficient technology - up to 77% energy savings over HID fixtures
- Operating ambient: -40°C to 65°C (PVM3L-PVM11L models); -40°C to 55°C (PVM13L-PVM25L models)
- High efficiency drivers provide reliable operation in the harshest environments. Various AC and DC input voltage options are available to suit virtually any drive requirement
- Option for redundancy in drivers with multiple series circuits connected to each driver to avoid complete loss of illumination
- Provided with lever lock connectors and standard three-pole terminal block for easy installation
- Contractor-friendly PVML LED utilizes the same mounting modules as our legacy HID luminaires, simplifying installation and reducing costs in retrofit projects

Model	Typical lumens (Type V)*	Wattage	Lumens per watt	Equivalent HID luminaire	Typical energy savings / lifetime
PVML-3	3,250	26	123	70W	Up to 77%
PVML-5	5,537	43	127	100W	Up to 67%
PVML-7	7,442	59	127	175W	Up to 67%
PVML-9	9,234	73	126	250W	Up to 74%
PVML-11	11,114	91	122	320W	Up to 74%
PVM13L	13,226	130	102	400W	Up to 68%
PVM17L	18,793	168	112	400-600W	Up to 72%
PVM21L	22,110	196	113	600-750W	Up to 74%
PVM25L	26,531	232	114	750-1000W	Up to 77%

* Tolerance +/- 10%.

Certifications:

- DesignLights Consortium® Qualified (some models are not DLC qualified)*

NEC and CEC
- Wet Locations, Type 4X, IP66

UL Standards
- UL1598 Luminaires, UL1598A Marine

CSA Standard
- cUL Listed to CSA Standard CSA C22.2 No. 250

IEC Standard
- CE

* Refer to www.designlights.org Qualified Products List under family models for full listing details. Not all models are approved for all application categories.

Champ® Pro PVML LED Luminaires - Ordering information 3L-11L

Part number example

PVML-3-N-2A-R1-G-UNV1-S831-S891

Champ PVML, 3,000 lumens, 4000K neutral white, ¾" pendant mount, Type I optics, wire guard, 100 -277 VAC driver, safety cable, diffused glass lens

PVML - 3 - N - 2A - R1 - G - UNV1 - S831 - S891

Light source/intensity†

3	3,250 nominal lumens
5	5,537 nominal lumens
7	7,442 nominal lumens
9	9,234 nominal lumens
11	11,114 nominal lumens

†Refer to Champ PVM ordering information on page 11 for 13,000 to 25,000 lumen models.

Color temperature**

BLANK	5000K, 70 CRI *(cool white)*
N*	4000K, 70 CRI *(neutral white)*
W	3000K, 80 CRI *(warm white)*

*Consult factory for lead time.
**5700k and 6500K are available upon request; consult factory.

Lens guard

BLANK	No guard
G	Wire guard

Optics

BLANK	Type V optic standard
R1	Type I optic
R3	Type III optic *(all mounts minus ceiling)*
R3AP*	Type III optic *(select when using Appleton® top hat adapter with Champ fixture)*
R3A1*	Type III optic *(ceiling with conduit 45° counterclockwise from top hat hinge)*
R3A2*	Type III optic *(ceiling with conduit 135° clockwise from top hat hinge)*
R3B1*	Type III optic *(ceiling with conduit 45° clockwise from top hat hinge)*
R3B2*	Type III optic *(ceiling with conduit 135° counterclockwise from top hat hinge)*

*Available with ceiling mount modules only.

Accessories & options†

S812	Trunnion mount kit with pin *(available with ceiling mount only)*
S831	Safety cable
S890	Quick clip
S933	80 CRI minimum *(4000K & 5000K only)*
TB6*	Six-pole terminal block

†Ordered with fixture or available separately.
*For NEC/CEC only.

Voltage

UNV1	100-277 VAC, 50/60 Hz; 127-250 VDC
UNV34	347-480 VAC, 50/60 Hz

IEC voltage; 100-240VAC @ 50/60 Hz

Mounting

BLANK	No mounting module
J	1-½ " stanchion, 25° angled
P	1-½" stanchion, straight
2A	¾" pendant
3A	1" pendant
20A	20mm pendant
25A	25mm pendant
2B	¾" cone pendant
3B	1" cone pendant
2HA	¾" flexible pendant
2C	¾" ceiling
3C	1" ceiling
20C	20mm ceiling
25C	25mm ceiling
2TW	¾" wall
3TW	1" wall
20TW	20mm wall
25TW	25mm wall

Lens material

BLANK	Clear glass
S891	Diffused glass
S896*	Teflon coated lens
S903	Clear polycarbonate

*NEC/CEC only.

Custom optics:

Three optical options to maximize light distribution and intensity:

Type I

Type III

Type V

TYPE I

Long and rectangular.

- Conveyor belts
- Hallways, aisleways, catwalks and walkways
- Ramps and loading docks
- Tunnels with overhead mounts

TYPE III

Wall mount light distribution, minimizing spillover.

- Narrow crosswalks or passages with wall mounted fixtures
- Tunnels with wall mount
- Wall or stanchion mount requiring 180° forward throw beam patterns

TYPE V

Regular circular distribution pattern.

- Pendant, ceiling or stanchion mount overhead building mounts
- Processing mills, industrial plants, large buildings, warehouses, etc.

Champ® Pro PVML LED Luminaires - Ordering information 13L-25L

Part number example

PVM17LW2AR1G/UNV1 S890

Champ PVM, 18,793 lumens, 3000K warm white, ¾" pendant mount, Type I optics, wire guard, 100-277 VAC driver, safety cable, diffused glass lens

PVM 17L W 2A R1 G /UNV1 S890

Lamp/function

13L	13,226 lumen LED
17L	18,793 lumen LED
21L	22,110 lumen LED
25L	26,531 lumen LED
GL*	Green (4,300 lumen LED)
AL*	Amber (5,000 lumen LED)

*Custom optics not available with colored LEDs.

Color temperature*

BLANK	Cool (5000K) or colored
N	Neutral (4000K)
W	Warm (3000K)

*Consult with factory for additional color temperature options.

Mounting style

BLANK	No cover
P	1-½" stanchion, straight
2A	¾" pendant
3A	1" pendant
20A	20mm pendant
25A	25mm pendant
2B	¾" cone pendant
3B	1" cone pendant
2C	¾" ceiling
3C	1" ceiling
20C	20mm ceiling
25C	25mm ceiling
2HA	¾" flexible pendant
2TW	¾" wall
3TW	1" wall
20TW	20mm wall
25TW	25mm wall

Optics

BLANK	Type V optic standard
R1	Type I optic
R3	Type III optic *(all mounts minus ceiling)*

Suffixes

S812*	Trunnion mount kit with pin
S831	Safety cable
S890	Quick clip
S891	Diffused lens
S896	Teflon coated lens
S903	Polycarbonate lens
TB6	Six-pole terminal block

*Order with ceiling mount only.

Voltage

/UNV1	120-277 VAC, 50/60 Hz; 108-250 VDC, 50/60 Hz
/UNV34	347-480 VAC, 50/60 Hz

Guard

BLANK	No guard
G	Wire guard (3L-11L)

Custom optics:

Three optical options to maximize light distribution and intensity:

Type I

Type III

Type V

TYPE I

Long and rectangular.

- Conveyor belts
- Hallways, aisleways, catwalks and walkways
- Ramps and loading docks
- Tunnels with overhead mounts

TYPE III

Wall mount light distribution, minimizing spillover.

- Narrow crosswalks or passages with wall mounted fixtures
- Tunnels with wall mount
- Wall or stanchion mount requiring 180° forward throw beam patterns

TYPE V

Regular circular distribution pattern.

- Pendant, ceiling or stanchion mount overhead building mounts
- Processing mills, industrial plants, large buildings, warehouses, etc.

Champ® Pro PVML LED Luminaires - Accessories

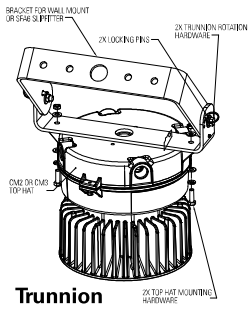

Trunnion

Mounting & hardware

VMVL S812 K1*	Trunnion mount kit with pin
VMVL S831 K1	Safety cable
VMVL S890 K1	Quick clip
CHMM1	Top hat adapter *(mounts to Appleton Mercmaster III top hats)*
347/480 K1	Step down transformer for 347-480 VAC applications

*Available with ceiling mounted modules only

Replacement driver kit

VMVL-3-5-7L-UNV1-DRIVER KIT	Replacement driver kit for PVML-3, -5 and -7 models
VMVL-9-11L-UNV1-DRIVER KIT	Replacement driver kit for PVML-9 and -11 models

Photocells

D2S20	Photocell, 120V
D2S208 277	Photocell, 208-277V

Lens guard

P3001	Wire guard (3L-11L)
P3002	Wire guard (13L-25L)

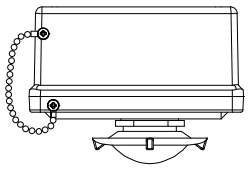

Occupancy sensors

ORDC/UNV1	3/4" NPT entry, 100-277 VAC

Occupancy sensor accessories (ordered separately)

CABLE KIT ORD 1	TECK armored cable (5ft) with TECK glands (¾")
CABLE KIT ORD 2	P Type non armored cable (5ft) with ADE1F glands (3/4")
CABLE KIT ORD 3	Metal-clad armored cable (5ft) with TMC glands (3/4")
CABLE KIT ORD 4	SO cable (5ft) with ADE1F glands (3/4")
ORDC WKIT	Wall mount kit
ORDC PKIT	Pendant mount kit
ORDC SKIT	Stanchion mount kit
REMOTE CONTROL 1	Remote control for programming sensor

Mounting options and dimensions:

Stanchion - 25° angled

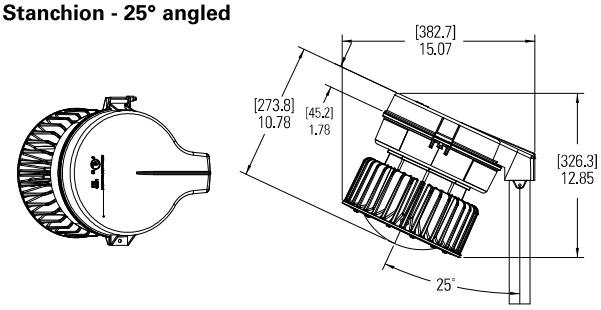

Stanchion - straight

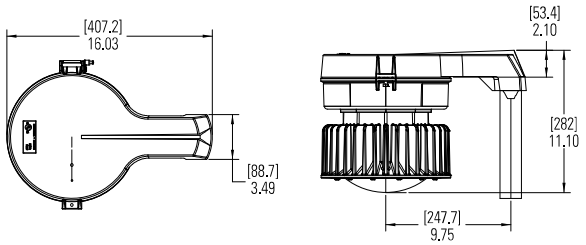

Pendant

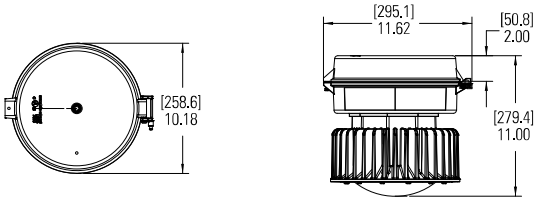

Ceiling

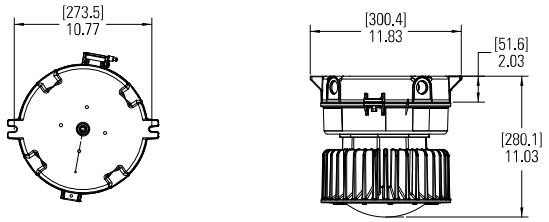

Wall

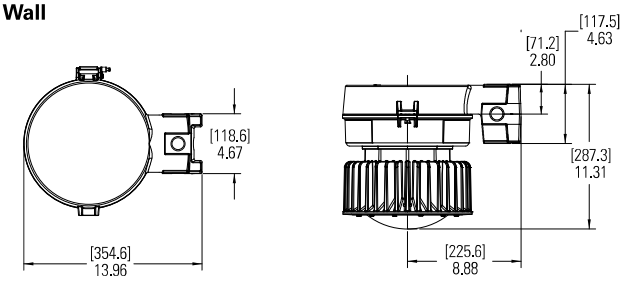

Cone pendant

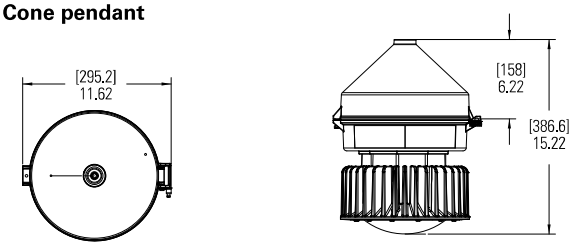

Champ® Pro PVMA Series LED Luminaires

The Champ Pro PVMA LED features a compact, high efficacy design with custom Type I, III and V optics to ensure maximum efficiency and mounting flexibility. The compact and lightweight PVMA LED is available in 5,000 and 7,500 lumen models.

- Performs reliably in medium or heavy duty industrial environments where extreme ambient temperatures, corrosive, wet, dusty conditions or significant vibration are common
- Mining, marine, food & beverage, wood, pulp & paper, pharmaceutical, livestock, wastewater, steel, power generation, chemical, automotive, aviation, aerospace and general industrial manufacturing

Key design features and benefits:

- Rugged design – engineered for durability in complex environments
- High efficiency – up to 122 lumens per watt and custom optics to maximize light on the work plane
- Ease of installation – compact footprint with ceiling, pendant, wall or stanchion mount options and the ability to retrofit Crouse-Hinds installed base
- Temperature rating: -40°C to 55°C
- 5-year fixture warranty - refer to the authorized distributor price book for Crouse-Hinds standard terms and conditions

Certifications:

- DesignLights Consortium® Qualified
- IP66
- RoHS

UL Standards

- UL1598, UL1598A

CSA Standards

- C22.2 No. 250

IEC Standard

- CE
- IEC 60598

Model	Typical lumens *	Wattage	Lumens per watt	Equivalent HID luminaire	Typical energy savings / lifetime
PVMA5L	5,884	48	122	150W	Up to 67%
PVMA7.5L	7,766	64	122	175W	Up to 67%

* Nominal lumens based on Type V optics, 5000K CCT with clear glass lens. Wattage measured at 120 VAC.

Champ® Pro PVMA LED Luminaires - Ordering information

Part number example

PMVA5LW2CR1G/UNV1 S831 S891

Champ Pro PVMA, 5,800 lumens, 3000K warm white, ¾" ceiling mount, Type I optics, wire guard, 120 -277 VAC driver, safety cable, diffused glass lens

PVMA 5L W 2C R1 G /UNV1 S831 S891

Light source/intensity

5L	5,800 nominal lumens
7.5L	7,700 nominal lumens

Color temperature*

A	5000K, 70 CRI *(cool white)*

Lens guard

BLANK	No guard
G	Wire guard

Voltage

/UNV1	120-277 VAC, 50/60 Hz; 127-300 VDC
/UNV34	347–480 VAC, 60 Hz

Optics

BLANK	Type V optic standard
R1	Type I optic
R3	Type III optic *(all mounts minus ceiling)*
R3AP*	Type III optic *(select when using Appleton® top hat adapter with Champ fixture)*
R3A1*	Type III optic *(ceiling with conduit 45° counterclockwise from top hat hinge)*
R3A2*	Type III optic *(ceiling with conduit 135° clockwise from top hat hinge)*
R3B1*	Type III optic *(ceiling with conduit 45° clockwise from top hat hinge)*
R3B2*	Type III optic *(ceiling with conduit 135° counterclockwise from top hat hinge)*

Lens material

BLANK	Clear glass
S891	Diffused glass
S903	Polycarbonate
S903D	Diffused polycarbonate

Accessories*

S812	Trunnion mount kit with pin
S831	Safety cable
S890	Quick clip

Ordered with fixture or available separately.

BLANK	No mounting module
J	1-½ " stanchion, 25° angled
P	1-½" stanchion, straight
2A	¾" pendant

3A	1" pendant
20A	20mm pendant
25A	25mm pendant
2B	2-¾" cone pendant

3B	1" cone pendant
2HA	¾" flexible pendant
2C	¾" ceiling
3C	1" ceiling

20C	20mm ceiling
25C	25mm ceiling
2TW	¾" wall
3TW	1" wall

20TW	20mm wall
25TW	25mm wall

Accessories *(ordered separately)*

Replacement driver kits

PVMA5L/UNV1 DRIVER KIT	Replacement driver kit for UNV1 driver *(120-277 VAC, 50/60 Hz;127-300 VDC)*
PVMA5L/UNV34 DRIVER KIT	Replacement driver kit for UNV34 driver *(347–480 VAC, 60 Hz)*
PVMA7.5L/UNV1 DRIVER KIT	Replacement driver kit for UNV1 driver *(120-277 VAC, 50/60 Hz;127-300 VDC)*
PVMA7.5L/UNV34 DRIVER KIT	Replacement driver kit for UNV34 driver *(347–480 VAC, 60 Hz)*

Mounting & hardware

VMVL S812 K1	Trunnion mount kit with pin
VMVL S831 K1	Safety cable
VMVL S890 K1	Quick clip

Lens guard

PA3001	Wire guard

Champ-Pak WPMV Series LED Wallpacks

The Crouse-Hinds series Champ-Pak WPMV is uniquely engineered to provide a low profile wall pack solution for industrial lighting applications. It's the ideal choice for vertical surface lighting where conditions require high quality, reliable illumination.

Champ-Pak WPMV LED wall packs are engineered to provide maintenance free illumination, long life and high performance in industrial areas. It is available from 3,000 to 7,000 lumens and is designed for extreme conditions.

- Heavy industrial, mine site processing areas, platforms, loading docks, tunnels, outdoor wall and areas requiring frequent on-and-off of lights

Key design features and benefits:

- Rated life of 60,000 hours @ 55°C operating ambient and 24/7 continuous operation for 365 days. Economic life of 170,000 hours @ 25°C ambient
- Impact-resistant lens sealed from the outside environment provides ingress protection against water and dust
- High efficiency: Up to 116 lumens per watt
- Engineered to perform in ambient temperatures from -40°C to +55°C
- Die cast aluminum LED housing provides efficient thermal path to heat sink assembly
- Vertical fin design facilitates air flow and dust shedding
- Multiple lens options: Clear glass lens standard. Optional lenses include diffused glass, clear polycarbonate and diffused polycarbonate
- Narrow & wide optics available for ideal light output and performance
- Factory-installed photocell available
- Wall, yoke and hub mount options for installation flexibility and optimal aiming
- Available with lever lock connectors for simple installation
- Contractor-friendly design is ideal for both retrofit and new construction
- 5-year fixture warranty - refer to the authorized distributor price book for Crouse-Hinds standard terms and conditions

Certifications:

- DesignLights Consortium® Qualified (pending)

NEC and CEC
- Marine and Wet Locations, NEMA 4X, IP66

UL Standards
- UL1598 Luminaires, UL1598A Marine, UL8750

CSA Standard
- CSA C22.2 No. 250

Model	Typical lumens *	Wattage	Lumens per watt	Equivalent MH luminaire	Typical energy savings / lifetime
WPMV3L	3,400	30.6	111	70W	Up to 70%
WPMV5L	5,200	44.8	116	100W	
WPMV7L	6,800	58.9	115	150W-175W	

*Nominal lumens based on 5000K CCT with clear glass lens.
Wattage measured at 120 VAC.

Champ-Pak WPMV LED Wallpacks - Ordering information

Part number example

WPMV3LWY-UNV1-S891 PC1

Champ-Pack WPMV LED wall pack, NEC/CEC rated, 3,400 lumens, 3000K warm white, wide optic,yoke mount, 120-277 VAC, diffused glass window, 120V photocell

WPMV 3L W Y - UNV1 - S891 PC1

Light source/intensity

3L	3,400 nominal lumens
5L	5,200 nominal lumens
7L	6,800 nominal lumens

Color temperature

BLANK	Cool (5000K)
N*	Neutral (4000K)
W	Warm (3000K)

*Consult factory for availability.

Optics

BLANK	Wide
R5	Narrow

Mounting

BLANK	Wall
H	Hub
Y	Yoke

Voltage

-UNV1	120-277 VAC, 50/60 Hz; 125, 250VDC
-UNV34	347-480 VAC, 50/60 Hz

Window material

BLANK	Clear glass
S891	Diffused glass
S903	Clear polycarbonate
S903D	Diffused polycarbonate

Photocell

PC1	120V
PC2	208-277V

Dimensions

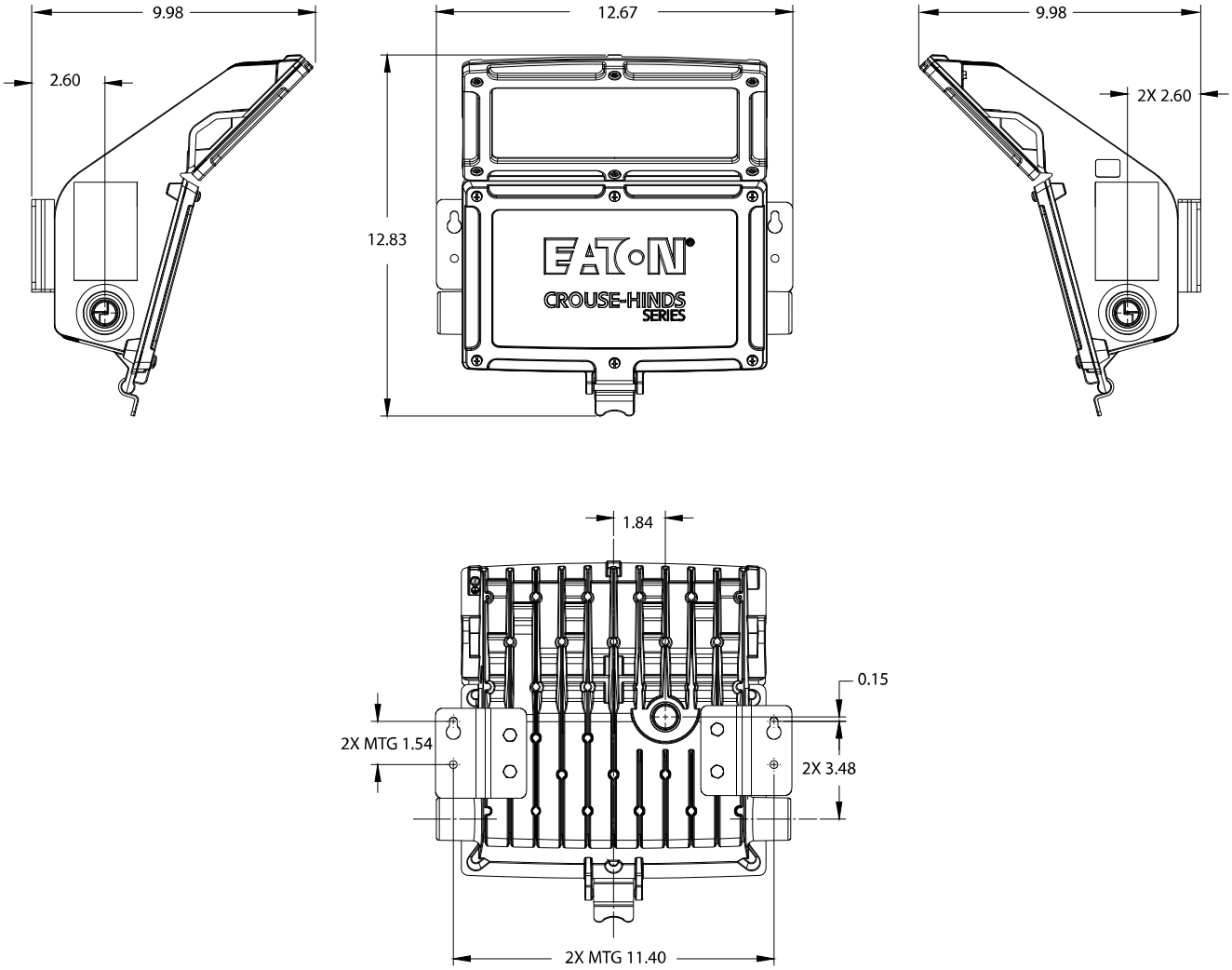

Champ® Pro PLLA Series Linear LED Luminaires

Champ Pro PLLA linear LED luminaires are designed to replace fluorescent T12, T8 and T5HO lighting in heavy and harsh industrial applications. Available in 2 foot and 4 foot versions with 3,900 lumens and 7,900 lumens respectively, the PLLA features a rugged and durable design with the industry's most versatile and flexible mounting options.

The PLLA LED stands up to high vibration, hose down, shock and impact, while delivering long life and high lumen performance for up to 20 years.

- Ideal for a variety of rugged industrial applications such as mining, food processing, marine, waste water treatment, heavy manufacturing and general wash down areas

Key design features and benefits:

- High efficacy: up to 132 LPW
- 60,000 hour lifetime @ 65°C ambient
- -40°C to +65°C ambient operating temperature
- Ultra slim profile: 2.7" height (excluding mounting brackets). Perfect for confined or low height areas
- Wide (120º) and narrow (80º) beam optics for uniform illumination
- Vibration-, impact- and shock-resistant. 2,000 psi high pressure hose rated
- Versatile ceiling/swivel, wall, flush, pole and pendant mounting options
- Four points of secondary retention and through feed wiring options
- Surge protection: 4kV line to line, 6kV line to earth
- Emergency battery back-up (90 minutes) and surge protection options (up to 10kV)‡ with PLL models
- 5-year fixture warranty - refer to the authorized distributor price book for Crouse-Hinds standard terms and conditions

Certifications:

NEC/CEC standards:

- Type 4X
- IP66
- Wet Locations

UL standards:

- UL1598 Luminaire
- UL1598A Luminaire for Installation on Marine Vessels

CSA standard:

- C22.2 No. 250

Additional standards:

- ABS design assessed

Model	Typical lumens	Wattage	Lumens per watt	Equivalent HID luminaire	Typical energy savings / lifetime
PLLA2	3,700	28.4	130	T12HO	Up to 63%
				T8HO	Up to 59%
				T5HO	Up to 47%
				T12	Up to 36%
				T8	Up to 25%
				T5	Up to 9%
PLLA4	7,900	59.8	132	T12HO	Up to 58%
				T8HO	Up to 54%
				T5HO	Up to 43%
				T12	Up to 37%
				T8	Up to 22%
				T5	Up to 10%

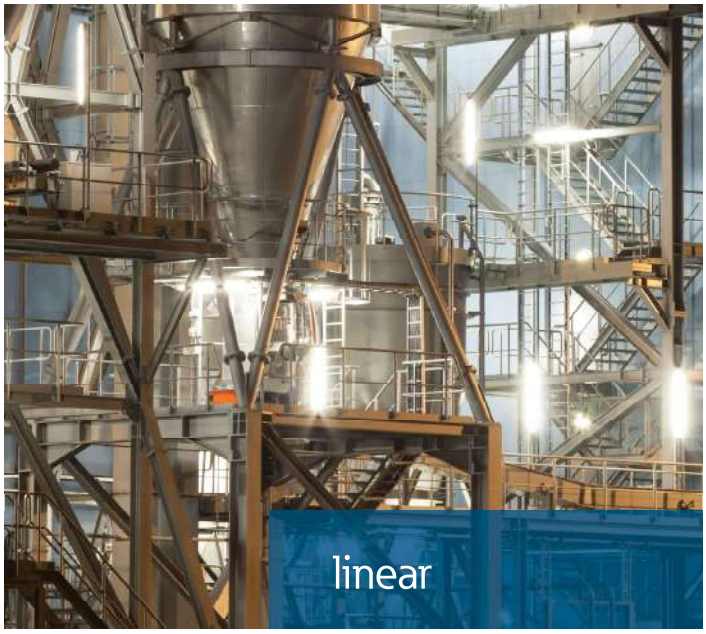

Champ® Pro PLLA LED Luminaires - Ordering Information

Part number example

PLLAW4N-UNV1-S903-TF-P

Champ Pro PLLA linear LED, warm white, 4 foot, ¾" hubs, 80° narrow light pattern, 120-277 VAC driver, polycarbonate lens, through feed hubs, painted

PLLA W 4 N -UNV1 -S903 -TF -P

Series

PLLA	Champ Pro series linear LED luminaire

Color temperature

BLANK	Cool white, 5000K
W	Warm white, 3500K

Length/lumens

4	4 ft. length, 7,900 lumens
2	2 ft. length, 3,700 lumens

Voltage

UNV1	120-277 VAC; 127-300 VDC

See page 10 for 347-480 VAC option models

Optics

BLANK	Wide (120°)
N	Narrow (80°)

Lens

BLANK	Clear glass
S891	Diffused glass
S903	Clear polycarbonate
S903D	Diffused polycarbonate

Cord options

LP*	LynxPOWER receptacles, factory pre-wired
CD*	Type P cable, 10 ft. (non-armored), ADE 1F series gland pre-wired to fixture
CO*	Change out power receptacle
TF	Pull wire included in the fixture

*Cannot be combined with "TF" suffix. Standard models only, not available with EM options.

Finish

BLANK	Natural aluminum
P	Painted (gray, epoxy)
WH	Painted (white, epoxy)

PLL 4 N /UNV34 S903 TF P

Series

PLL	Champ Pro linear LED luminaire

Length/lumens

4	4 ft. length, 7,900 lumens
2	2 ft. length, 3,900 lumens

Voltage

/UNV34	347-480 VAC
/UNV1	EM1 emergency batter back-up only

Optics

BLANK	Wide (120°)
N	Narrow (80°)

Lens

S903	Clear polycarbonate
S903D	Diffused polycarbonate

Cord options

LP*	LynxPOWER receptacles, factory pre-wired
CD*	Type P cable, 10 ft. (non-armored), ADE 1F series gland pre-wired to fixture
TF	Pull wire included in the fixture

*Cannot be combined with "TF" suffix.

Finish

BLANK	Natural aluminum
P	Painted (gray, epoxy)
WH	Painted (white, epoxy)

Emergency backup

BLANK	Standard model (no battery back-up)
EM1*	Integrated emergency battery back-up

* One year warranty. Remote EM Kit also available, 120-277 VAC only. Contact factory for more information. All EM1 models are painted gray epoxy as standard

Accessories (ordered separately)

DP1057MTK	Flush/back mount back plate
DP1050MTK	Ceiling/swivel mount
DP1053MTK	Ceiling/wall mount offset
MP1054MTK KIT	Ceiling mount bracket and adapter kit
MP1054MTK A KIT	Bracket adapter kit
DP1052MTK	Offset wall mount
PM KIT 1.25	Pole mount kit, 1.25" conduit
PM KIT 1.5	Pole mount kit, 1.50" conduit
PM KIT 2.0	Pole mount kit, 2.00" conduit
PEND ORD KIT	Pendant mount kit
SS KIT	Safety chain kit

CABLE KIT ORD 1	Teck non armored cable (5ft) with Teck glands
CABLE KIT ORD 2	P Type non armored cable (5ft) with ADE1F glands
CABLE KIT ORD 3	SO cord (5ft) with ADE1F glands
*ML3A4WC030F	3 ft. Mini-Line LynxPOWER cordset
*ML3A4WC060F	6 ft. Mini-Line LynxPOWER cordset
*ML3A4WC120F	12 ft. Mini-Line LynxPOWER cordset
VMVL/UNV1 80W 1A KIT	1 amp driver replacement kit 90-277 VAC for 4 ft. linear
VMVL/UNV34 80W 1A KIT	1 amp driver replacement kit 347-480 VAC for 4 ft. linear
VMVL/UNV1 80W 0.5A KIT	0.5 amp driver replacement kit 90-277 VAC for 2 ft. linear
VMVL/UNV34 80W 0.5A KIT	0.5 Amp driver replacement kit 347-480 VAC for 2 ft. linear

*Additional lengths available. Contact Eaton's Crouse-Hinds customer service for additional options.

Replacement driver kits (ordered separately)

MLLA2-UNV1-DRIVER KIT	120-277 VAC driver replacement for 2ft linear *(30W driver: EUC030S050DTM)*
MLLA4-UNV1-DRIVER KIT	120-277 VAC driver replacement for 4ft linear *(60W driver: EUC060S105DTM)*
PLL EM1 DRIVER KIT	Driver replacement kit for integral emergency battery back up option

Pauluhn® APEX Series Linear LED Luminaires

Crouse-Hinds series Pauluhn Apex linear LED light fixtures replace fluorescent T12, T8 and T5HO luminaires in food processing, hose down and corrosive environments.

The APEX LED was designed with food and beverage processing facilities in mind. The fixture housing is angled to mitigate debris build-up and features a food rated epoxy powder coat finish. Plus, its robust design can withstand 1,500 PSI hose pressure for wash down applications.

Three models of the APEX are available, from 13,000 to 25,000 lumens.

- Food and beverage, pharmaceutical and agriculture processing facilities.
- High pressure wash down and corrosive environments

13,000 & 17,000 lumen models

25,000 lumen model

Key design features and benefits:

- 100+ lumens per watt provides highly efficient lighting
- Rated life is up to 60,000 hours of maintenance-free and safe operation
- Type 6061 aluminum housing with epoxy powder coat for protection against corrosion
- Angled light fixture mitigates debris build-up
- Dimmable and occupancy sensor configurations available to reduce energy consumption
- Available with polycarbonate or diffused polycarbonate lens
- Operating temperature: -40°C to +55°C*
- 1,500 PSI hose down tested
- Surface mount, cable mount and threaded rod mount options with a through feed design for simplified multiple fixture wiring
- 5000K, 80 CRI
- 5-year fixture warranty - refer to the authorized distributor price book for Crouse-Hinds standard terms and conditions

* APX25L model is 50°C maximum ambient operating temperature.

Model	Typical lumens *	Wattage	Lumens per watt	Equivalent MH luminaire	Typical energy savings / lifetime
APX13L	13,000	122	106	3-lamp T5HO	
APX17L	17,000	144	118	4-lamp T5HO	Up to 38%
APX25L	25,000	217	115	6-lamp T5HO	

*All T5HO lamps used in comparison are 4 foot length.

Certifications:

NEC/CEC standards:

- Type 4X
- IP66
- NSF Splash Zone

UL standards:

- UL1598
- UL8750

CSA standard:

- C22.2 No. 250

Pauluhn® APEX LED Luminaires - Ordering Information

Part number example

APX13L/UNV1 S903

Pauluhn Apex, 13,000 lumens, cool white, 120-277VAC; 127-250 VDC, polycarbonate lens

APX **13L** **/UNV1** **S903**

Series	
APX	Pauluhn Apex for non-hazardous food processing locations

Lumens	
13L	13,000 lumens
17L	17,000 lumens
25L	25,000 lumens

Voltage at 50/60 Hz	
/UNV1	120-277 VAC; 127-250 VDC
/UNV34	347-480 VAC

Lenses	
S903	Polycarbonate lens
S903D	Diffused polycarbonate lens

Accessories (ordered separately)	
APX1093MTK	Jack chain/aircraft cable bracket
APX1097MTK	Adjustable surface mount bracket
W3	3 ft. #16/3 cord (WP163SR-3); change suffix "3" for longer cord
Q	Quick disconnect receptacle (WP003MR)
WP163FP-6	Cord assembly, molded plug and 6 ft. of #16/3 cable (WP163FP); change suffix "6" for longer cord

Dimensions

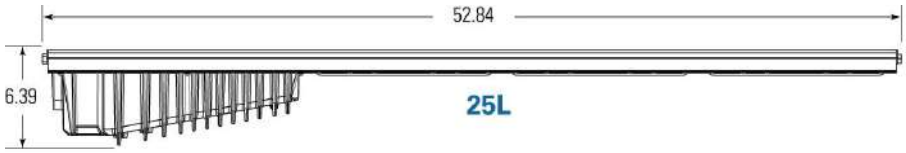

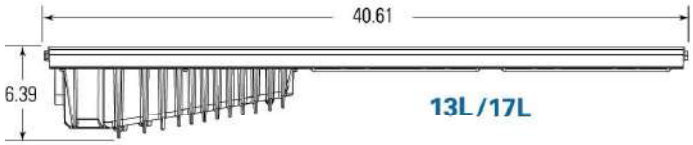

Mounting

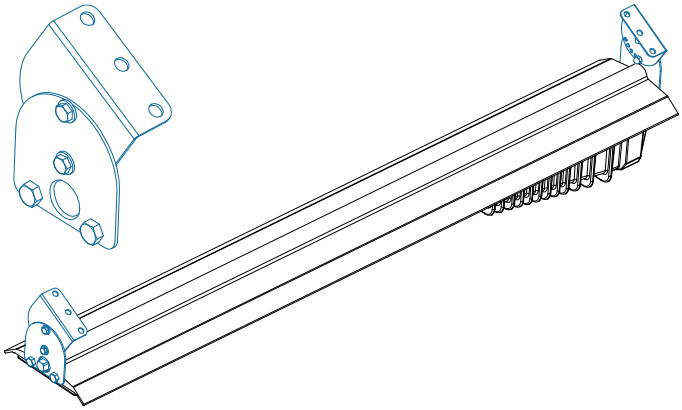

Adjustable surface mount

APX1097MTK

Standard adjustable surface mounting kit includes:
- (2) 304 SS brackets and 316 SS mounting hardware

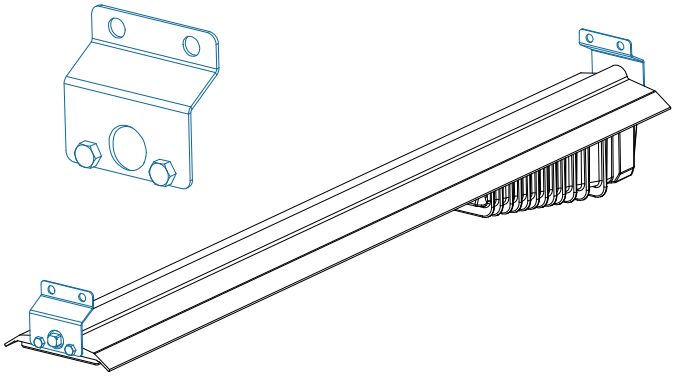

Chain mount

APX1093MTK

Standard jack chain/aircraft cable mounting kit includes:
- (2) 304 SS brackets and 316 SS mounting hardware

Vaporgard™ Pro P2L/P3L Series LED Luminaires

Vaporgard Pro LED luminaires provide uniform, crisp light and are suitable for lower mounting heights and areas or equipment requiring targeted illumination. Its unique domeless, low profile design is ideal for compact spaces where incandescent and HID based luminaires are too large to fit in the mechanical envelope required.

The Vaporgard LED is available in 1500 and 3300 lumen models, with color temperature options of cool white, neutral white, and warm white. Using four high power, high brightness LED arrays, this fixture delivers similar light levels to a 50W HID or 150-200W incandescent

- For use indoors or outdoors in confined spaces or low ceiling areas, such as tunnels, catwalks, utility rooms, over doorways, entries, landings, etc.
- Ideal for areas requiring shatter-protected products, such as food processing facilities

Key design features and benefits:

- Instant illumination and re-strike
- Cold temperature operation; no warm-up time
- Lightweight, low profile and cool surface temperatures
- Heat sink designed to perform in high ambient temperatures up to +55°C and as low as -30°C
- Thick walled castings make for a tough, rugged housing that keeps the internal driver and LED temperature down
- High efficacy LEDs can save up to 90% in energy costs
- 70,000 hours rated life can provide 8 years of maintenance-free lighting
- Driver with internal fusing for branch circuit protection
- Tempered clear glass lens standard. Diffused glass lens and teflon coated lens (for increased safety in food processing facilities) available
- Shock- and vibration-resistant
- No mercury or hazardous chemicals - eliminates disposal concerns
- Installed using the same wall and ceiling mounts as incandescent Vaporgard fixtures
- 5-year fixture warranty - refer to the authorized distributor price book for Crouse-Hinds standard terms and conditions

Model	Nominal lumens	Wattage	Equivalent incandescent luminaire	Typical energy savings/ lifetime
P2LM2C/UNV1	1,772	14	50W HID or 150-200W incandescent	90% energy savings and 50,000 hours of 24/7 operation!
P3LM2C/UNV1	3,335	29		

Certifications:

- DesignLights Consortium® *(pending)*

NEC and CEC
- Wet Locations, Type 4X, IP66

UL Standards
- UL1598 Luminaires, UL1598A Marine

CSA Standard
- cUL Listed to CSA Standard CSA C22.2 No. 250

IEC Standard
- CE

Vaporgard™ Pro P2L/P3L LED Luminaires - Ordering Information

Part number example

P2LM2CHBF1/UNV1 S891

Vaporgard LED, rated for harsh/heavy industrial areas, 1,500 lumens, Cool white (5000K), 70 CRI, wall mount with junction box, 120-277 VAC, 50/60 Hz. diffused glass lens

P 2LM2 C HBF 1 / UNV1 S891

Series

P	Harsh/heavy industrial areas

Lumen level (nominal)

2LM2	1,772 lumen LED
3LM2	3,335 lumen LED

Color temperature

C	Cool (5000K), 70 CRI min.
N	Neutral (4000K), 80 CRI min.
W	Warm (3000K), 80 CRI min.

*Consult factory for availability on neutral color temperature.

Mounting modules

BLANK	LED housing only *(warehouse/spare parts)*
HBF	VXT – wall mount with VXFT junction box
A	VLA – pendant mount
HJ	VXJ – stanchion mount
HW*	VXW – wall mount
HF	VXF – junction box for ceiling mount
HR*	VLHR – adapter cover (for retrofit)
HT	VXT – wall mount

*Mounts directly to the wall, no VXFT junction box needed.

Hub size

BLANK	No hub *(LED housing, adapter)*
1	½" NPT *(pendant, ceiling, wall)*
2	¾" NPT *(pendant, ceiling, wall)*
3	1" NPT *(pendant)*
4	1-¼" NPT *(stanchion)*

Options

BLANK	Clear glass lens
S891	Diffused glass lens
S896	Teflon coated lens
S903	Clear polycarbonate lens

Voltage

UNV1	120-277 VAC, 50/60 Hz;
DC1*	10-30 VDC

*Rated to +40°C

CASE STUDY - Mining shovel retrofit

Challenge: A copper mine runs P&H 2300 electric shovels 24 hours a day, 365 days a year and at a cost of $12,500 per hour. Each shovel has 10-16 luminaires; ~6 above the tracks for visibility of potential material obstructions and ~8-10 inside the interior for walkways, safety lighting and general illumination.

Problem: Current lighting on shovel is incandescent

- Lamps need replacing every 1-2 weeks due to excessive vibration on equipment and can take up to an hour to replace
- Lumen output is low and creates poor visibility in critical areas both inside and outside the shovel due to inadequate lighting.

Solution: Vaporgard™ LED Series Luminaires; ceiling mount (P2LCHF2/DC) for inside and above the tracks and wall mount (P2LCHT2/DC) for service areas.

Benefit: Vaporgard LEDs essentially eliminated lamp maintenance and saved over $1M in downtime

- First shovel outfitted has operated without fixture failure for over 15 months
- Plant maintenance took lamp replacement off of the PM list
- Fixtures paid for themselves in roughly 3 months due to maintenance free operation

Specification and Support Services

Eaton's Crouse-Hinds Series offers a suite of specification support tools that help simplify, streamline and speed up the industrial design and specification process. From lighting designs and drawing support tools to ROI calculators, submittal sheets and spec forms, Eaton has you covered in virtually every aspect of the process.

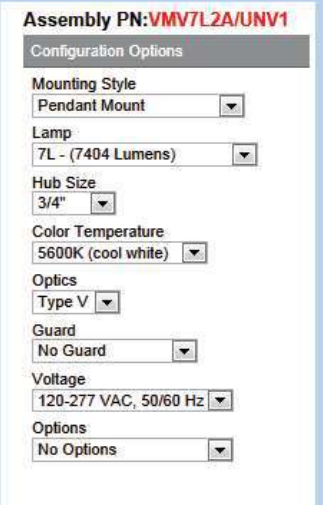

SELECT - Pick products you need to download to the unit level.

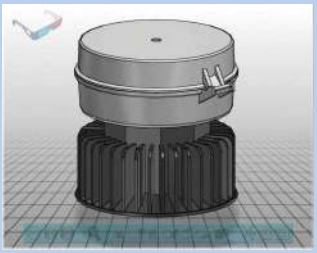

VIEW - View your chosen product in 2D or 3D.

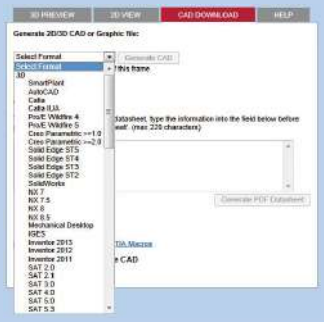

DOWNLOAD - Output drawing and parametric data for use on your project.

CoSPEC 3D Drawing and Design

The CoSPEC Online 3D Drawing Catalog gives you the ability to select and view Crouse-Hinds products in 2D and 3D formats. Then, with just a few clicks, you can download design content and parametric data in one of nearly 100 file formats. File format outputs are native to the selected software, which eliminates translation errors and speeds the integration of content into your project. Combine this handy tool with our SKU-level Submittal Sheets for extra convenience.

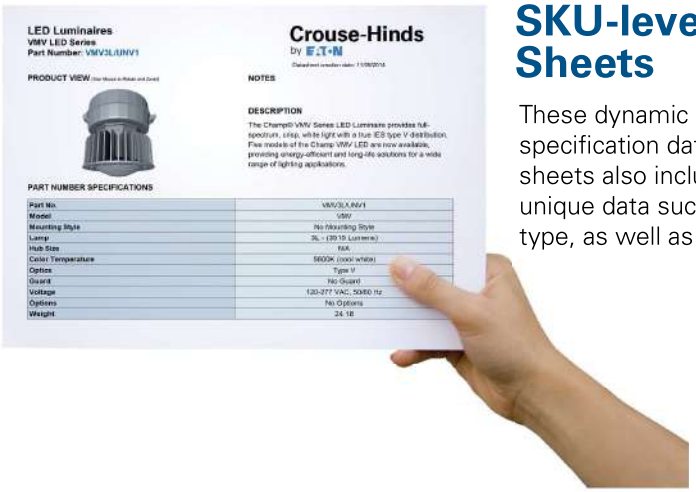

SKU-level Submittal Sheets

These dynamic PDFs feature both SKU-level specification data and key family specs. The sheets also include a custom text area for unique data such as project name or fixture type, as well as an embedded 3D drawing.

For more information on our specification and support services, please visit www.crouse-hinds.com/cospec

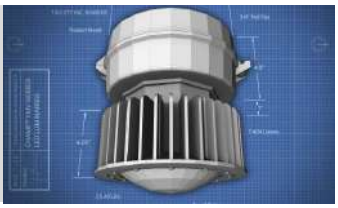

Convenient resources for engineers, designers and drafters

Lighting Layouts

From simple layouts to complex drawings, our lighting design engineers deliver precise, efficient, application and environment-appropriate lighting designs. Our experts can save you time and money by creating a virtual model of a proposed design, revealing luminaire characteristics and effects within the installation.

- 3D fixture placement with access to alternate fixtures and mounting heights
- Point-by-point footcandle diagram calculations
- AutoCAD®-generated floor plan overlays
- Complete bill of material

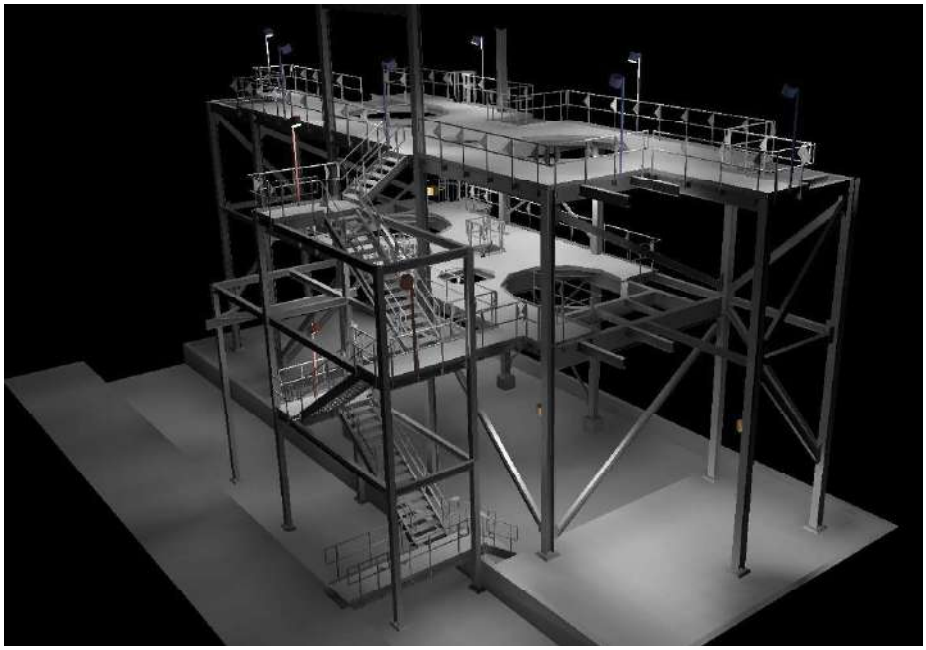

Energy Savings & Maintenance Savings | **Total Cost of Ownership Comparison**

Total Cost of Ownership

	400W MH	LED System
Initial investment	$80,000.00	$150,000.00
Utility rebate	$0.00	($0.00)
Tax rebate	$0.00	($0.00)
Net investment	$80,000.00	$150,000.00
Total energy costs	$1,952,640.00	$609,120.00
Incremental Air Cooling Energy Costs	$0.00	$0.00
Total labor costs	$549,818.18	$0.00
Total cost of ownership	$2,582,458.18	$759,120.00

Total Savings

	LED System
Energy savings	$1,343,520.00
Labor & material savings	$549,818.18
Total savings	$1,893,338.18
Initial investment	($150,000.00)
Estimated Utility Rebate	$0.00
Estimated Tax Rebate	$0.00
Total return	$1,743,338.18

Payback Period on the Incremental LED Cost (years): **0.5**

Payback period on the entire LED installation (years): **1.0**

ROI Calculators

Use our interactive online cost calculators to determine how much you or your clients will save with LED luminaires from Eaton's Crouse-Hinds Business. These handy, intuitive calculators allow you to enter design parameters unique to a project and view the specific savings and payback period realized.

PRODUCT SPECIFICATION GUIDE – LED LUMINAIRES – CHAMP VMV LED SERIES
SECTION 26 54 00 – CLASSIFIED LOCATION LIGHTING

Product Specification Guide – Champ® LED VMV Luminaires Hi-Lumen

SECTION 26 54 00 – Classified Location Lighting

PART 1 GENERAL

1.01 SCOPE

A. Furnishing, installation, and assembly of lighting fixtures for areas classified as hazardous.

1.02 REFERENCES

A. National Fire Protection Association (NFPA):

1. NFPA 70 National Electrical Code (NEC)

Specification Guide Forms

Written to CSI guidelines, our Specification Guide Forms are ideal for designers whose customers have out-of-date or incomplete spec libraries. They're a quick and easy way to optimize the safety, reliability and efficiency of your design requirements.

U.S. (global headquarters): Eaton's Crouse-Hinds division

1201 Wolf Street
Syracuse, NY 13208

(866) 764-5454
FAX: (315) 477-5179
FAX Orders Only:
(866) 653-0640

crousecustomerctr@eaton.com

Canada

Toll Free: 800-265-0502
FAX: (800) 263-9504
FAX Orders only: (866) 653-0645

Middle East

971 4 8066100
FAX: 971 4 8894813

chmesales@eaton.com

Korea

82-2-3484-6783
82-2-3484-6778

CCHK-sales@
cooperindustries.com

Mexico/Latin America/Caribbean

52-555-804-4000
FAX: 52-555-804-4020

ventascentromex@eaton.com

Singapore

65-6645-9888
FAX: 65-6297-4819

chsi-sales@
cooperindustries.com

Australia

61-2-8787-2777
FAX: 61-2-9609-2342

CEASales@
cooperindustries.com

Europe (Germany)

49 (0) 6271 806-500
49 (0) 6271 806-476

sales.CCH.de@
cooperindustries.com

China

86-21-2899-3600
FAX: 86-21-2899-4055

cchsales@
cooperindustries.com

India

91-124-4683888
FAX: 91-124-4683899

cchindia@eaton.com

For more information:

If further assistance is required, please contact an authorized Eaton Distributor, Sales Office, or Customer Service Department.

Eaton
1000 Eaton Boulevard
Cleveland, OH 44122
United States
Eaton.com

© 2020 Eaton
All Rights Reserved
Printed in USA
Publication No. 5238-0420
April 2020

Eaton is a registered trademark.

All other trademarks are property of their respective owners.

Powering Business Worldwide